duma rent
www.duma-rent.com

Genie®

Operator's Manual

with Maintenance Information

Third Edition
Fourth Printing
Part No. 1000237

Z™-80/60

from 801 to 2448

duma rent www.duma-rent.com

Important

Read, understand and obey these safety rules and operating instructions before operating this machine. Only trained and authorized personnel shall be permitted to operate this machine. This manual should be considered a permanent part of your machine and should remain with the machine at all times. If you have any questions, call Genie Industries.

Contents

Page
Safety Rules 1
Legend 8
Controls 9
Pre-operation Inspection 12
Maintenance 14
Function Tests 17
Workplace Inspection 23
Operating Instructions 24
Decals 30
Transport and Lifting Instructions 34
Specifications 37

Contact us:

Internet: http://www.genielift.com
e-mail: techpub@genieind.com

Copyright © 2002 by Genie Industries

Third Edition: Fourth Printing, February 2010

"Genie" and "Z" are registered trademarks of Genie Industries in the U.S.A. and many other countries.

These machines comply with ANSI/SIA 92.5-1992.

Printed on recycled paper L

Printed in U.S.A.

Safety Rules

Danger

Failure to obey the instructions and safety rules in this manual will result in death or serious injury.

Do Not Operate Unless:

☑ You learn and practice the principles of safe machine operation contained in this operator's manual.

1 Avoid hazardous situations.

Know and understand the safety rules before going on to the next section.

2 Always perform a pre-operation inspection.

3 Always perform function tests prior to use.

4 Inspect the workplace.

5 Only use the machine as it was intended.

☑ You read, understand and obey the manufacturer's instructions and safety rules—safety and operator's manuals and machine decals.

☑ You read, understand and obey employer's safety rules and worksite regulations.

☑ You read, understand and obey all applicable governmental regulations.

☑ You are properly trained to safely operate the machine.

duma rent www.duma-rent.com

Electrocution Hazards

This machine is not electrically insulated and will not provide protection from contact with or proximity to electrical current.

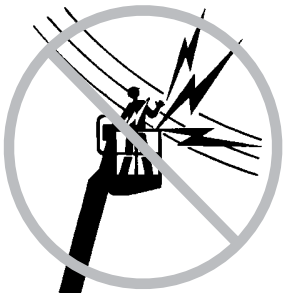

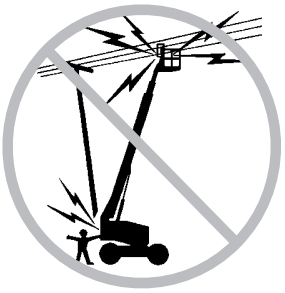

Maintain safe distances from electrical power lines and apparatus in accordance with applicable governmental regulations and the following chart.

Voltage Phase to Phase	Minimum Safe Approach Distance Feet	Meters
0 to 300V	Avoid Contact	
300V to 50KV	10	3.05
50KV to 200KV	15	4.60
200KV to 350KV	20	6.10
350KV to 500KV	25	7.62
500KV to 750KV	35	10.67
750KV to 1000KV	45	13.72

Allow for platform movement, electrical line sway or sag and beware of strong or gusty winds.

Keep away from the machine if it contacts energized power lines. Personnel on the ground or in the platform must not touch or operate the machine until energized power lines are shut off.

Do not use the machine as a ground for welding unless the machine is equipped with the weld line to platform option and it is properly connected.

Tip-over Hazards

Occupants, equipment and materials shall not exceed the maximum platform capacity.

Maximum platform capacity	500 lbs	227 kg
Maximum occupants		2

The weight of options and accessories, such as pipe cradles, panel cradles and welders, will reduce the rated platform capacity and must be factored into the total platform load. See the decals on the options.

Do not raise or extend the boom unless the machine is on a firm, level surface.

Do not depend on the tilt alarm as a level indicator. The tilt alarm sounds in the platform only when the machine is on a severe slope.

duma rent www.duma-rent.com

If the tilt alarm sounds:
Do not extend, rotate or raise the boom above horizontal. Move the machine to a firm, level surface before raising the platform. If the tilt alarm sounds when the platform is raised, use extreme caution to retract the boom and lower the platform. Do not rotate the boom while lowering. Move the machine to a firm, level surface before raising the platform.

Do not use the platform controls to free a platform that is caught, snagged or otherwise prevented from normal motion by an adjacent structure. All personnel must be removed from the platform before attempting to free the platform using the ground controls.

Do not raise the boom when wind speeds may exceed 28 mph / 12.5 m/s. If wind speeds exceed 28 mph / 12.5 m/s when the boom is raised, lower the boom and do not continue to operate the machine.

Do not operate the machine in strong or gusty winds. Do not increase the surface area of the platform or the load. Increasing the area exposed to the wind will decrease machine stability.

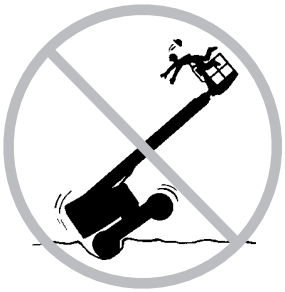

Use extreme care and slow speeds while driving the machine in the stowed position across uneven terrain, debris, unstable or slippery surfaces and near holes and drop-offs.

Do not drive the machine on or near uneven terrain, unstable surfaces or other hazardous conditions with the boom raised or extended.

Do not drive the machine on a slope that exceeds the maximum uphill, downhill or side slope rating of the machine. Slope rating applies to machines in the stowed position.

Maximum slope rating, stowed position, 2WD	
Counterweight uphill	30% (17°)
Counterweight downhill	15% (9°)
Side slope	25% (14°)
Maximum slope rating, stowed position, 4WD	
Counterweight uphill	45% (24°)
Counterweight downhill	35% (19°)
Side slope	25% (14°)

Note: Slope rating is subject to ground conditions and adequate traction.

Do not push off or pull toward any object outside of the platform.

Maximum allowable side force - ANSI & CSA
150 lbs / 667 N

Maximum allowable manual force - CE & Australia
90 lbs / 400 N

Do not alter or disable machine components that in any way affect safety and stability.

Do not replace items critical to machine stability with items of different weight or specification.

Do not modify or alter an aerial work platform without prior written permission from the manufacturer. Mounting attachments for holding tools or other materials onto the platform, toeboards or guard rail system can increase the weight in the platform and the surface area of the platform or the load.

Do not replace factory-installed tires with tires of different specification or ply rating.

Do not replace factory-installed foam-filled tires with air-filled tires. Wheel weight is critical to stability.

High flotation tires must be factory-installed. Do not replace standard factory-installed tires with high flotation tires.

Do not place or attach overhanging loads to any part of this machine.

Do not place ladders or scaffolds in the platform or against any part of this machine.

Do not transport tools and materials unless they are evenly distributed and can be safely handled by person(s) in the platform.

Do not use the machine on a moving or mobile surface or vehicle.

Be sure all tires are in good condition and lug nuts are properly tightened.

Fall Hazards

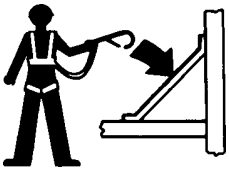

Occupants must wear a safety belt or harness in accordance with governmental regulations. Attach the lanyard to the anchorage point provided in the platform.

Do not sit, stand or climb on the platform guard rails. Maintain a firm footing on the platform floor at all times.

Do not climb down from the platform when raised.

Keep the platform floor clear of debris.

Lower the platform entry mid-rail or close the entry gate before operating.

duma rent www.duma-rent.com

Collision Hazards

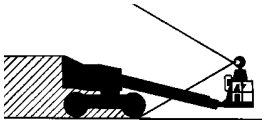

Be aware of limited sight distance and blind spots when driving or operating.

Be aware of boom position and tailswing when rotating the turntable.

Operators must comply with employer, job site and governmental rules regarding the use of personal protective equipment.

Check the work area for overhead obstructions or other possible hazards.

Be aware of crushing hazards when grasping the platform guard rail.

Observe and use the circle and square markings and the color-coded direction arrows on the platform controls and drive chassis for drive and steer functions.

Do not lower the boom unless the area below is clear of personnel and obstructions.

Limit travel speed according to the condition of the ground surface, congestion, slope, location of personnel, and any other factors which may cause collision.

Do not operate a boom in the path of any crane unless the controls of the crane have been locked out and/or precautions have been taken to prevent any potential collision.

No stunt driving or horseplay while operating a machine.

Component Damage Hazards

Do not use any battery or charger greater than 12V DC to jump-start the engine.

Do not use the machine as a ground for welding unless the machine is equipped with the weld line to platform option and it is properly connected.

duma rent www.duma-rent.com

Explosion and Fire Hazards

Do not start the engine if you smell or detect liquid petroleum gas (LPG), gasoline, diesel fuel or other explosive substances.

Do not refuel the machine with the engine running.

Refuel the machine and charge the battery only in an open, well-ventilated area away from sparks, flames and lighted tobacco.

Do not operate the machine in hazardous locations or locations where potentially flammable or explosive gases or particles may be present.

Do not spray ether into engines equipped with glow plugs.

Damaged Machine Hazards

Do not use a damaged or malfunctioning machine.

Conduct a thorough pre-operation inspection of the machine and test all functions before each work shift. Immediately tag and remove from service a damaged or malfunctioning machine.

Be sure all maintenance has been performed as specified in this manual and the appropriate service manual.

Be sure all decals are in place and legible.

Be sure that the operator's, safety and responsibilities manuals are complete, legible and in the storage container located in the platform.

Bodily Injury Hazard

Do not operate the machine with a hydraulic oil or air leak. An air leak or hydraulic leak can penetrate and/or burn skin.

Always operate the machine in a well-ventilated area to avoid carbon monoxide poisoning.

Improper contact with components under any cover will cause serious injury. Only trained maintenance personnel should access compartments. Access by operator is only advised when performing the Pre-operation Inspection. All compartments must remain closed and secured during operation.

Weld Line to Platform Safety

Read, understand and obey all warnings and instructions provided with the welding power unit.

Do not connect weld leads or cables unless the welding power unit is turned off at the platform controls.

Do not operate unless the weld cables are properly connected.

Connect the positive lead to the twist-lock connector at the turntable and platform.

Clamp the negative lead to the ground post at the turntable and platform.

Decal Legend

Genie product decals use symbols, color coding and signal words to identify the following:

Safety alert symbol—used to alert personnel to potential personal injury hazards. Obey all safety messages that follow this symbol to avoid possible injury or death.

DANGER

Red—used to indicate the presence of an imminently hazardous situation which, if not avoided, will result in death or serious injury.

WARNING

Orange—used to indicate the presence of a potentially hazardous situation which, if not avoided, could result in death or serious injury.

CAUTION

Yellow with safety alert symbol—used to indicate the presence of a potentially hazardous situation which, if not avoided, may cause minor or moderate injury.

CAUTION

Yellow without safety alert symbol—used to indicate the presence of a potentially hazardous situation which, if not avoided, may result in property damage.

NOTICE

Green—used to indicate operation or maintenance information.

duma rent www.duma-rent.com

Legend

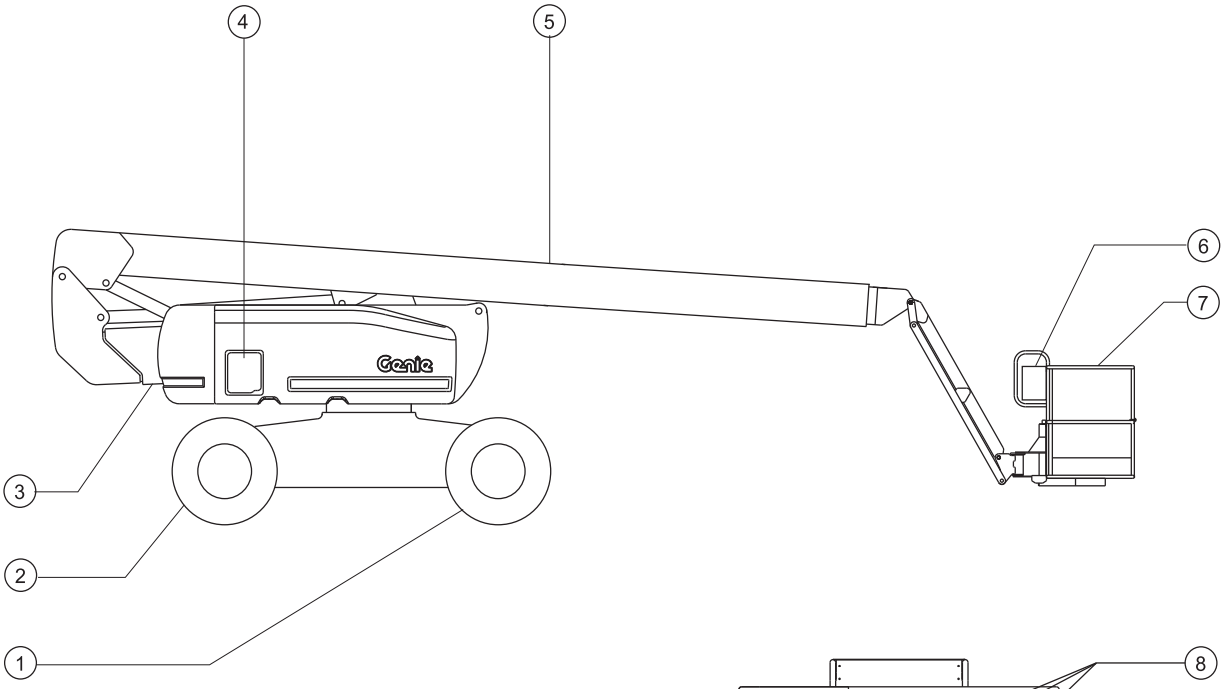

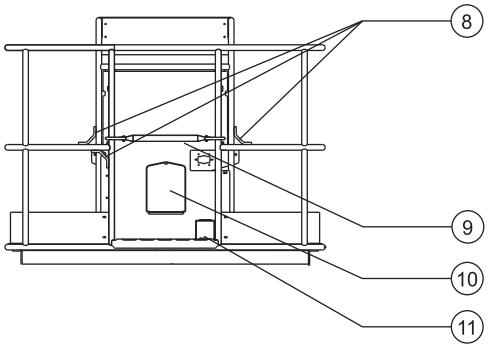

1 Circle-end tire (yellow arrow)
2 Square-end tire (blue arrow)
3 Secondary boom
4 Ground controls
5 Primary boom
6 Platform controls
7 Platform
8 Lanyard anchorage point
9 Sliding mid-rail
10 Manual storage container
11 Foot switch

duma rent www.duma-rent.com

Controls

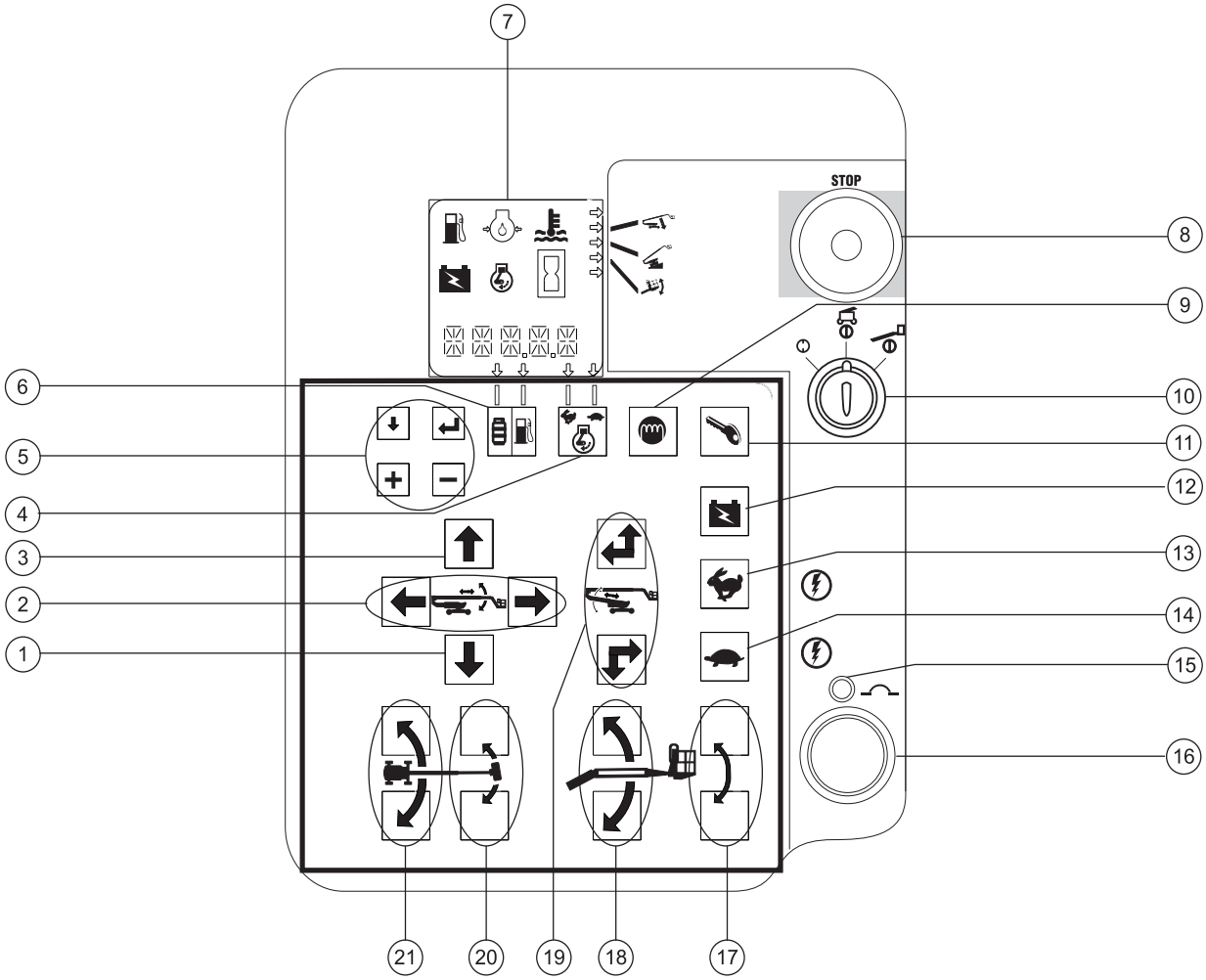

Ground Control Panel

1 Boom down button
2 Boom extend/retract buttons
3 Boom up button
4 Engine speed select button
5 LCD screen control buttons
6 Gasoline/LPG select button
7 LCD readout screen
8 Red Emergency Stop button
9 Diesel models: Glow plug button
10 Key switch for off/ground/platform selection
11 Engine start button
12 Auxiliary power button
13 High speed function enable button
14 Low speed function enable button
15 20A circuit breaker for system circuit
16 Alarm
17 Platform level up/down buttons
18 Jib boom up/down buttons
19 Secondary boom up/extend and down/retract buttons
20 Platform rotate left/right buttons
21 Turntable rotate left/right buttons

duma rent www.duma-rent.com

CONTROLS

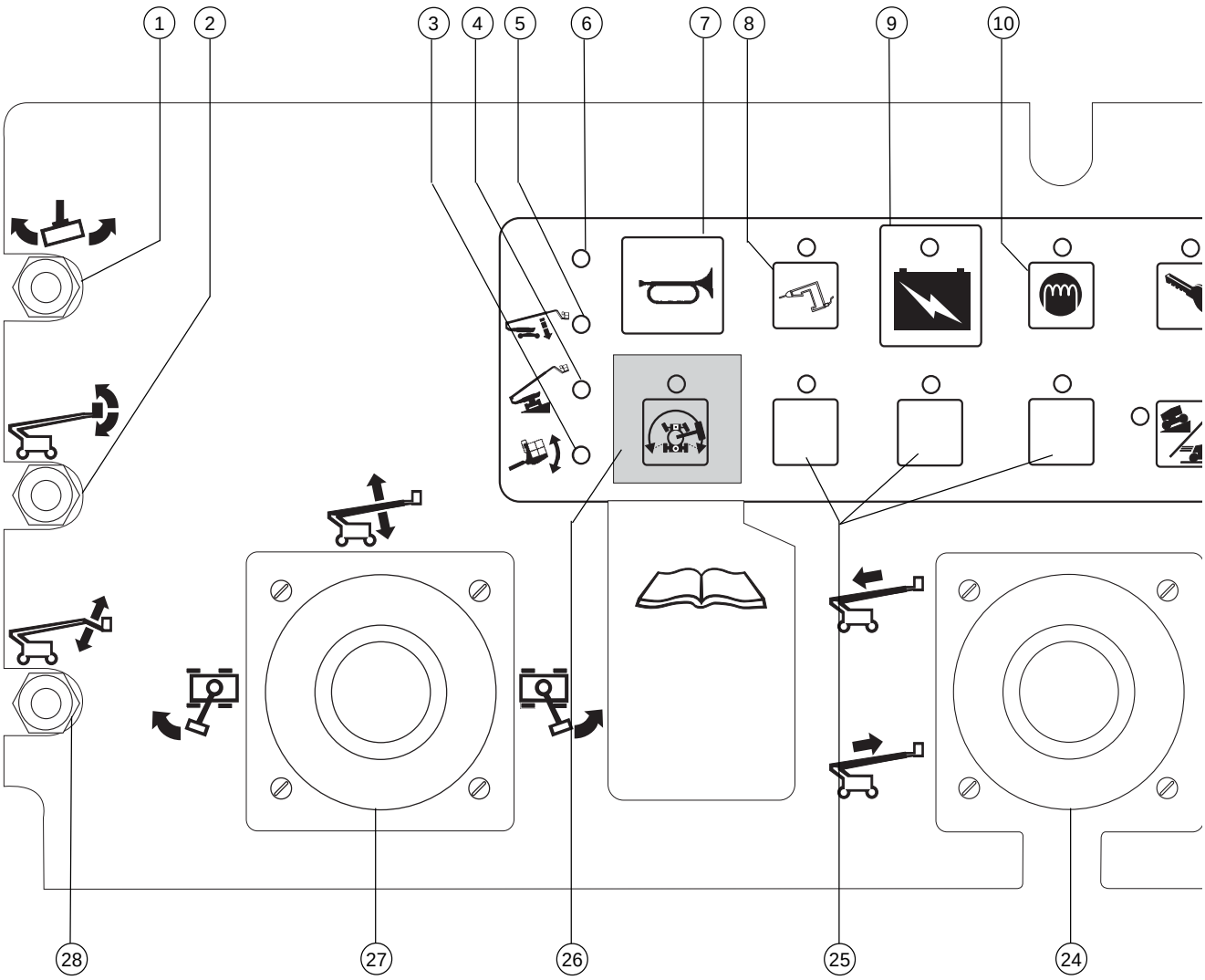

Platform Control Panel

1 Platform rotate toggle switch

2 Platform level toggle switch

3 Platform Not Level indicator light

4 Machine Not Level indicator light

5 Lower Primary Boom indicator light

6 not used

7 Horn button

8 Generator button with indicator light (option)

9 Auxiliary power button with indicator light

10 Diesel models: Glow plug button with indicator light

11 Engine start button with indicator light

12 Drive select button with indicator lights:
Machine on incline symbol: Low range operation for inclines
Machine on level surface symbol: High range operation for maximum drive speed

13 Steer mode select buttons with indicator lights

14 Engine idle (rpm) select button with indicator lights:
- Rabbit & Foot Switch: foot switch activated high idle
- Turtle: low idle
- Rabbit: high idle

duma rent www.duma-rent.com

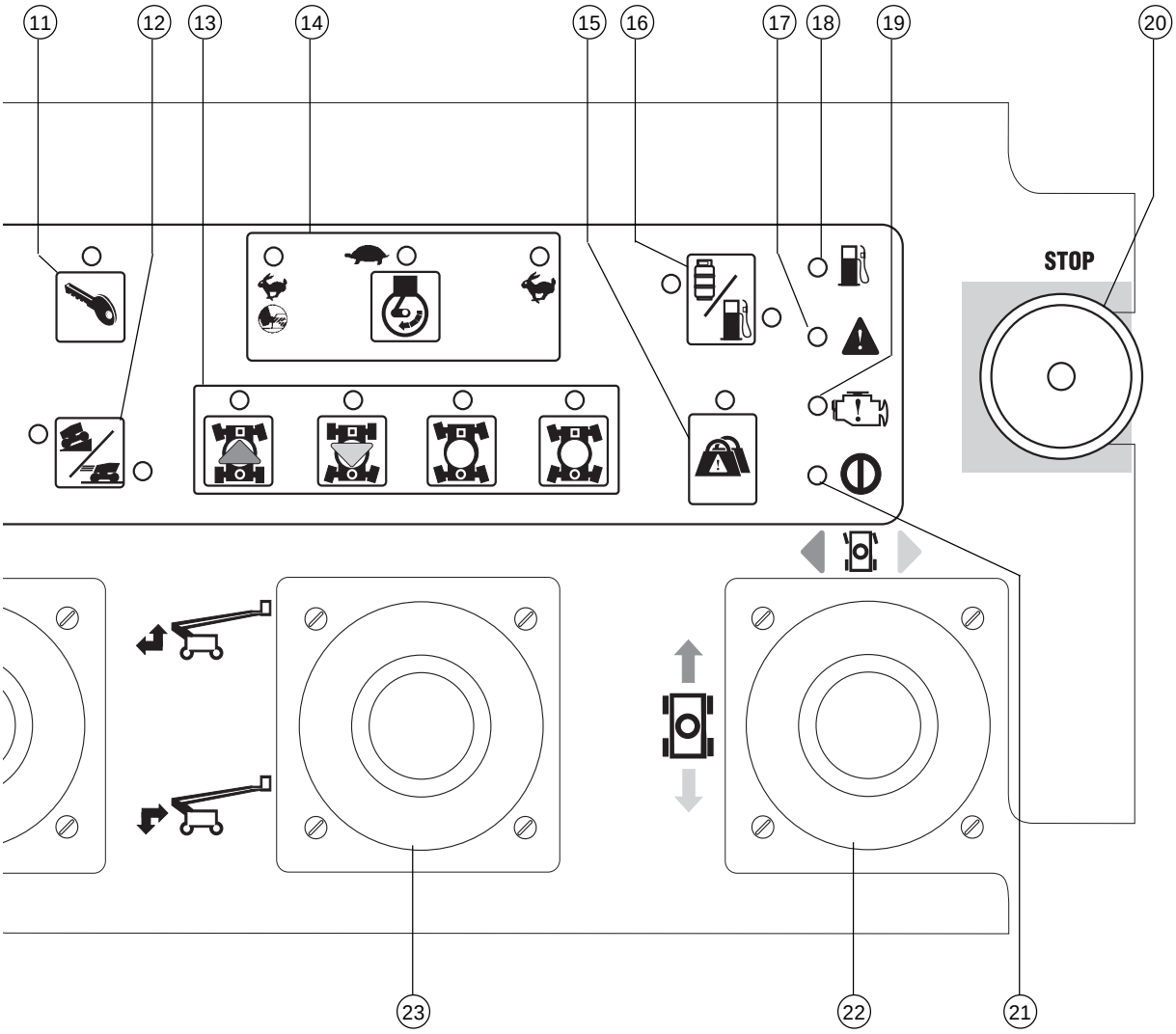

15 Platform overload indicator light (if equipped)

16 Gasoline/LPG models: Gasoline/LPG select button with indicator lights

17 Fault indicator light

18 Low fuel indicator light

19 Check engine indicator light

20 Red Emergency Stop button

21 Power indicator light

22 Dual axis proportional control handle for drive and steer functions
OR Proportional control handle for drive function and thumb rocker for steer function

23 Single axis proportional control handle for secondary boom up/extend and down/retract function

24 Single axis proportional control handle for primary boom extend/retract function

25 Used for optional equipment

26 Drive enable button with indicator light

27 Dual axis proportional control handle for primary boom up/down and turntable rotate left/right functions

28 Jib boom up/down toggle switch

Pre-operation Inspection

Do Not Operate Unless:

☑ You learn and practice the principles of safe machine operation contained in this operator's manual.

1 Avoid hazardous situations.

2 Always perform a pre-operation inspection.

Know and understand the pre-operation inspection before going on to the next section.

3 Always perform function tests prior to use.

4 Inspect the workplace.

5 Only use the machine as it was intended.

Fundamentals

It is the responsibility of the operator to perform a pre-operation inspection and routine maintenance.

The pre-operation inspection is a visual inspection performed by the operator prior to each work shift. The inspection is designed to discover if anything is apparently wrong with a machine before the operator performs the function tests.

The pre-operation inspection also serves to determine if routine maintenance procedures are required. Only routine maintenance items specified in this manual may be performed by the operator.

Refer to the list on the next page and check each of the items.

If damage or any unauthorized variation from factory delivered condition is discovered, the machine must be tagged and removed from service.

Repairs to the machine may only be made by a qualified service technician, according to the manufacturer's specifications. After repairs are completed, the operator must perform a pre-operation inspection again before going on to the function tests.

Scheduled maintenance inspections shall be performed by qualified service technicians, according to the manufacturer's specifications and the requirements listed in the responsibilities manual.

Pre-operation Inspection

- ❑ Be sure that the operator's, safety and responsibilities manuals are complete, legible and in the storage container located in the platform.
- ❑ Be sure that all decals are legible and in place. See Decals section.
- ❑ Check for engine oil leaks and proper oil level. Add oil if needed. See Maintenance section.
- ❑ Check for hydraulic oil leaks and proper oil level. Add oil if needed. See Maintenance section.
- ❑ Check for engine coolant leaks and proper level of coolant. Add coolant if needed. See Maintenance section.
- ❑ Check for battery fluid leaks and proper fluid level. Add distilled water if needed. See Maintenance section.

Check the following components or areas for damage, improperly installed or missing parts and unauthorized modifications:

- ❑ Electrical components, wiring and electrical cables
- ❑ Hydraulic hoses, fittings, cylinders and manifolds
- ❑ Fuel and hydraulic tanks
- ❑ Drive and turntable motors and drive hubs
- ❑ Boom and axle wear pads
- ❑ Tires and wheels
- ❑ Engine and related components
- ❑ Limit switches and horn
- ❑ Alarms and beacons (if equipped)
- ❑ Nuts, bolts and other fasteners
- ❑ Platform entry mid-rail or gate

Check entire machine for:

- ❑ Crack in welds or structural components
- ❑ Dents or damage to machine
- ❑ Excessive rust, corrosion or oxidation

- ❑ Be sure that all structural and other critical components are present and all associated fasteners and pins are in place and properly tightened.
- ❑ After you complete your inspection, be sure that all compartment covers are in place and latched.

duma rent www.duma-rent.com

Maintenance

Observe and Obey:

- ☑ Only routine maintenance items specified in this manual shall be performed by the operator.
- ☑ Scheduled maintenance inspections shall be completed by qualified service technicians, according to the manufacturer's specifications and the requirements specified in the responsibilities manual.

Maintenance Symbols Legend

NOTICE The following symbols have been used in this manual to help communicate the intent of the instructions. When one or more of the symbols appear at the beginning of a maintenance procedure, it conveys the meaning below.

Indicates that tools will be required to perform this procedure.

Indicates that new parts will be required to perform this procedure.

Indicates that a cold engine is required before performing this procedure.

Check the Engine Oil Level

Maintaining the proper engine oil level is essential to good engine performance and service life. Operating the machine with an improper oil level can damage engine components.

NOTICE Check the oil level with the engine off.

1 Check the oil dipstick. Add oil as needed.

Ford LRG-425 EFI Engine EPA 2004 Compliant Oil viscosity requirements	
Oil type	10W-40
Oil type - cold conditions	5W-30
Deutz BF4L 2011 Engine Tier II Compliant Oil viscosity requirements	
Oil type	15W-40
Oil type - cold conditions	5W-30
Perkins 804C-33 Engine Oil viscosity requirements	
Oil type	15W-40
Oil type - cold conditions	5W-40

duma rent www.duma-rent.com

Check the Hydraulic Oil Level

Maintaining the hydraulic oil at the proper level is essential to machine operation. Improper hydraulic oil levels can damage hydraulic components. Daily checks allow the inspector to identify changes in the oil level that might indicate the presence of hydraulic system problems.

1 Be sure that the engine is off and the boom is in the stowed position.

2 Visually inspect the sight gauge located on the side of the hydraulic oil tank.

⊙ Result: The hydraulic oil level should be within the top 2 inches / 5 cm of the sight gauge.

Hydraulic oil specifications	
Hydraulic oil type	Chevron Rykon® Premium MV equivalent

Check the Batteries

Proper battery condition is essential to good engine performance and operational safety. Improper fluid levels or damaged cables and connections can result in engine component damage and hazardous conditions.

WARNING Electrocution hazard. Contact with hot or live circuits may result in death or serious injury. Remove all rings, watches and other jewelry.

WARNING Bodily injury hazard. Batteries contain acid. Avoid spilling or contacting battery acid. Neutralize battery acid spills with baking soda and water.

NOTICE The controls battery is behind the starter battery.

1 Put on protective clothing and eye wear.

2 Be sure that the battery cable connections are tight and free of corrosion.

3 Be sure that the battery hold-down bar is in place and secure.

4 Remove the battery vent caps.

5 Check the battery acid level. If needed, replenish with distilled water to the bottom of the battery fill tube. Do not overfill.

6 Install the vent caps.

NOTICE Adding terminal protectors and a corrosion preventative sealant will help eliminate corrosion on the battery terminals and cables.

Check the Engine Coolant Level - Liquid Cooled Models

Maintaining the engine coolant at the proper level is essential to engine service life. An improper coolant level will affect the engine's cooling capability and damage engine components. Daily checks will allow the inspector to identify changes in coolant level that might indicate cooling system problems.

1 Check the fluid level in the coolant recovery tank. Add fluid as needed.

⊙ Result: The fluid level should be in the NORMAL range.

WARNING Bodily injury hazard. Fluids in the radiator are under pressure and extremely hot. Use caution when removing cap and adding fluids.

Check the Tire Pressure

NOTICE This procedure does not need to be performed on machines equipped with the foam-filled tire option.

WARNING Bodily injury hazard. An over-inflated tire can explode and could cause death or serious injury.

WARNING Tip-over hazard. Do not use temporary flat tire repair products.

To safeguard maximum stability, achieve optimum machine handling and minimize tire wear, it is essential to maintain proper pressure in all air-filled tires.

1 Check each tire with an air pressure gauge. Add air as needed.

High flotation tire pressure	80 psi	5.5 bar

Scheduled Maintenance

Maintenance performed quarterly, annually and every two years must be completed by a person trained and qualified to perform maintenance on this machine according to the procedures found in the service manual for this machine.

Machines that have been out of service for more than three months must receive the quarterly inspection before they are put back into service.

Function Tests

Do Not Operate Unless:

☑ You learn and practice the principles of safe machine operation contained in this operator's manual.

1 Avoid hazardous situations.

2 Always perform a pre-operation inspection.

3 Always perform function tests prior to use.

Know and understand the function tests before going on to the next section.

4 Inspect the workplace.

5 Only use the machine as it was intended.

Fundamentals

The function tests are designed to discover any malfunctions before the machine is put into service. The operator must follow the step-by-step instructions to test all machine functions.

A malfunctioning machine must never be used. If malfunctions are discovered, the machine must be tagged and removed from service. Repairs to the machine may only be made by a qualified service technician, according to the manufacturer's specifications.

After repairs are completed, the operator must perform a pre-operation inspection and function tests again before putting the machine into service.

1 Select a test area that is firm, level and free of obstruction.

At the Ground Controls

2 Turn the key switch to ground control.

3 Pull out the red Emergency Stop button to the on position.

⊙ Result: The LCD screen will come on and display no error messages. The beacon (if equipped) should flash.

Note: In cold climates, the LCD readout screen will need to warm up before the display appears.

4 Start the engine. See Operating Instructions section.

Test Emergency Stop

5 Push in the red Emergency Stop button to the off position.

⊙ Result: The engine should turn off and no functions should operate.

6 Pull out the red Emergency Stop button to the on position and restart the engine.

Test the Machine Functions

7 Do not press and hold a function enable/speed select button. Attempt to activate each boom and platform function button.

⊙ Result: No boom and platform functions should operate.

8 Press and hold a function enable /speed select button and activate each boom and platform function button.

⊙ Result: All boom and platform functions should operate through a full cycle. The descent alarm (if equipped) should sound while the boom is lowering.

duma rent www.duma-rent.com

FUNCTION TESTS

Test Auxiliary Controls

9 Shut the engine off.

10 Pull out the red Emergency Stop button to the on position.

11 Simultaneously push and hold the auxiliary power button and push each boom function button.

Note: To conserve battery power, test each function through a partial cycle.

⊙ Result: All boom functions should operate.

Test the Tilt Sensor

12 Push one of the LCD screen buttons until TURNTABLE LEVEL SENSOR X-DIRECTION appears.

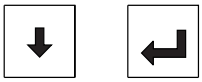

⊙ Result: The LCD screen should display the angle in degrees.

13 Push one of the LCD screen buttons until TURNTABLE LEVEL SENSOR Y-DIRECTION appears.

⊙ Result: The LCD screen should display the angle in degrees.

14 Push one of the LCD screen buttons until PLATFORM LEVEL SENSOR DEGREES appears.

⊙ Result: The LCD screen should display the angle in degrees.

Test the Operating Envelope

15 Push one of the LCD screen buttons shown until PRI BOOM ANGLE is displayed.

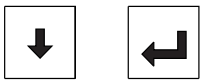

16 Raise the primary boom and observe the LCD screen.

⊙ Result: The primary boom should raise and the LCD screen should display the primary boom angle in degrees from 35 to 65. The primary boom should stop when the screen reads 65 degrees.

17 Lower the primary boom.

18 Simultaneously push the LCD screen buttons shown to activate status mode.

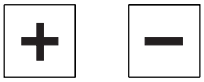

19 Push one of the LCD screen buttons shown until SEC BOOM ANGLE is displayed.

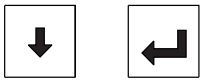

20 Push and hold the secondary boom up/extend button.

⊙ Result: The secondary boom should raise and the LCD screen should display:
=0
>0
>35
=65

The secondary boom should raise and then extend. The secondary boom should not extend until it is fully raised.

21 Push and hold the secondary boom down/retract button.

⊙ Result: The secondary boom should fully retract and then lower. The secondary boom should not lower unless it is fully retracted.

duma rent www.duma-rent.com

At the Platform Controls

Test Emergency Stop

22 Turn the key switch to platform control.

23 Push in the platform red Emergency Stop button to the off position.

⊙ Result: The engine should turn off and no functions should operate.

24 Pull out the red Emergency Stop button and restart the engine.

Test the Hydraulic Oil Return Filter

25 Press the engine idle speed select button until the indicator light next to high idle (rabbit symbol) is on.

26 Locate and check the hydraulic filter condition indicator.

⊙ Result: The indicator should be in the green area.

27 Press the engine idle speed select button until the indicator light next to foot switch activated high idle (rabbit and foot switch symbol) is on.

Test the Horn

28 Push the horn button.

⊙ Result: The horn should sound.

Test the Tilt Sensor Alarm

29 Push a button, such as the engine RPM button or the fuel select button.

⊙ Result: The alarm should sound at the platform controls.

Test the Foot Switch

30 Push in the platform red Emergency Stop button to the off position.

31 Pull out the red Emergency Stop button to the on position but do not start the engine.

32 Press down the foot switch and attempt to start the engine by pushing the engine start button.

⊙ Result: The engine should not start.

33 Do not press down the foot switch and restart the engine.

34 Do not press down the foot switch and test each machine function.

⊙ Result: No machine functions should operate.

Test Machine Functions

35 Press down the foot switch.

36 Activate each machine function control handle, toggle switch or button.

⊙ Result: All functions should operate through a full cycle.

duma rent www.duma-rent.com

FUNCTION TESTS

Test the Steering (models with 4 wheel steer)

37 Push the steer mode select button for square-end (blue arrow) steer.

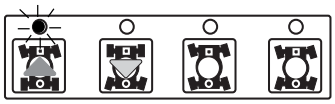

38 Press down the foot switch.

39 Slowly move the drive/steer control handle in the direction indicated by the blue triangle on the control panel OR press the thumb rocker switch in the direction indicated by the blue triangle.

⊙ Result: The square-end wheels should turn in the direction that the blue triangles point on the drive chassis.

40 Push the steer mode select button for circle-end (yellow arrow) steer.

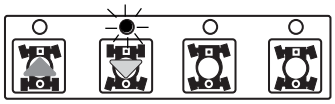

41 Press down the foot switch.

42 Slowly move the drive/steer control handle in the direction indicated by the yellow triangle on the control panel OR press the thumb rocker switch in the direction indicated by the yellow triangle.

⊙ Result: The circle-end wheels should turn in the direction that the yellow triangles point on the drive chassis.

43 Push the steer mode select button for crab steer.

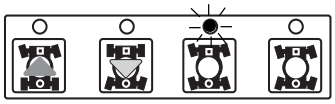

44 Press down the foot switch.

45 Slowly move the drive/steer control handle in the direction indicated by the blue triangle on the control panel OR press the thumb rocker switch in the direction indicated by the blue triangle..

⊙ Result: All wheels should turn in the direction that the blue triangles point on the drive chassis.

46 Push the steer mode select button for coordinated steer.

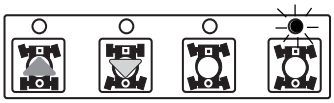

47 Press down the foot switch.

48 Slowly move the drive/steer control handle in the direction indicated by the blue triangle on the control panel OR press the thumb rocker switch in the direction indicated by the blue triangle.

⊙ Result: The square-end wheels should turn in the direction that the blue triangles point on the drive chassis. The circle-end wheels should turn in the direction that the yellow triangles point on the drive chassis.

Test the Steering (models with 2 wheel steer)

49 Press down the foot switch.

50 Press the thumb rocker switch on top of the drive control handle in the direction indicated by the blue triangle on the control panel OR slowly move the drive/steer control handle in the direction indicated by the blue triangle.

⊙ Result: The steer wheels should turn in the direction that the blue triangles point on the drive chassis.

51 Press the thumb rocker switch in the direction indicated by the yellow triangle on the control panel OR slowly move the drive/steer handle in the direction indicated by the yellow triangle.

⊙ Result: The steer wheels should turn in the direction that the yellow triangles point on the drive chassis.

duma rent www.duma-rent.com

Test Drive and Braking

52 Press down the foot switch.

53 Slowly move the drive/steer control handle in the direction indicated by the blue arrow on the control panel until the machine begins to move, then return the handle to the center position.

⊙ Result: The machine should move in the direction that the blue arrow points on the drive chassis, then come to an abrupt stop.

54 Slowly move the drive/steer control handle in the direction indicated by the yellow arrow on the control panel until the machine begins to move, then return the handle to the center position.

⊙ Result: The machine should move in the direction that the yellow arrow points on the drive chassis, then come to an abrupt stop.

Note: The brakes must be able to hold the machine on any slope it is able to climb.

Test the Oscillate Axle (oscillating axle-equipped models)

55 Start the engine from the platform controls.

56 Drive the right square-end tire up onto a 6 inch / 15 cm block or curb.

⊙ Result: The three remaining tires should stay in firm contact with the ground.

57 Drive the left square-end tire up onto a 6 inch / 15 cm block or curb.

⊙ Result: The three remaining tires should stay in firm contact with the ground.

58 Drive both square-end tires up onto a 6 inch / 15 cm block or curb.

⊙ Result: The circle-end tires should stay in firm contact with the ground.

Test the Drive Enable System

59 Press down the foot switch and lower the booms to the stowed position.

60 Rotate the turntable until the primary boom moves past one of the circle-end tires.

⊙ Result: The drive enable indicator light should come on while the boom is anywhere in the range shown.

61 Move the drive/steer control handle off center.

⊙ Result: No drive function should operate.

62 Push the drive enable button and slowly move the drive/steer control handle off center.

⊙ Result: The drive function should operate.

Note: When the drive enable system is in use, the machine may drive in the opposite direction that the drive and steer control handle is moved.

Use the color-coded direction arrows on the platform controls and the drive chassis to identify the direction of travel.

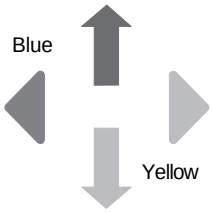

If the drive/steer control handle is not moved within two seconds of pushing the drive enable button, the drive function will not operate.

duma rent www.duma-rent.com

FUNCTION TESTS

Test Limited Drive Speed

63 Press down the foot switch.

64 Raise the primary boom to 10° above horizontal.

65 Slowly move the drive control handle to the full drive position.

⊙ Result: The maximum achievable drive speed with the primary boom raised should not exceed 1 foot / 30 cm per second.

Note: Models with foam filled tires will travel 40 feet / 12 m in 40 seconds. Models with high flotation tires will travel 40 feet / 12 m in 62 seconds.

66 Lower the primary boom to the stowed position.

67 Extend the primary boom 4 feet / 1.2 m.

68 Slowly move the drive control handle to the full drive position.

⊙ Result: The maximum achievable drive speed with the primary boom extended should not exceed 1 foot / 30 cm per second.

Note: The machine will travel 40 feet / 12 m in 40 seconds.

69 Retract the primary boom to the stowed position.

70 Raise the secondary boom to 10° above horizontal.

71 Slowly move the drive control handle to the full drive position.

⊙ Result: The maximum achievable drive speed with the secondary boom raised should not exceed 1 foot / 30 cm per second.

Note: Models with foam filled tires will travel 40 feet / 12 m in 40 seconds. Models with high flotation tires will travel 40 feet / 12 m in 62 seconds.

72 Lower the secondary boom to the stowed position.

If the drive speed with the primary or secondary boom raised or the primary boom extended exceeds 1 foot / 30 cm per second, immediately tag and remove the machine from service.

Test Auxiliary Controls

73 Push in the red Emergency Stop button to the off position to shut off the engine.

74 Pull out the red Emergency Stop button to the on position.

75 Press down the foot switch.

76 Simultaneously press and hold the auxiliary power button and activate each function control handle, toggle switch or button.

Note: To conserve battery power, test each function through a partial cycle.

⊙ Result: All boom and steer functions should operate.

Workplace Inspection

Do Not Operate Unless:

☑ You learn and practice the principles of safe machine operation contained in this operator's manual.

1 Avoid hazardous situations.

2 Always perform a pre-operation inspection.

3 Always perform function tests prior to use.

4 Inspect the workplace.

Know and understand the workplace inspection before going on to the next section.

5 Only use the machine as it was intended.

Fundamentals

The workplace inspection helps the operator determine if the workplace is suitable for safe machine operation. It should be performed by the operator prior to moving the machine to the workplace.

It is the operator's responsibility to read and remember the workplace hazards, then watch for and avoid them while moving, setting up and operating the machine.

Workplace Inspection

Be aware of and avoid the following hazardous situations:

- drop-offs or holes
- bumps, floor obstructions or debris
- sloped surfaces
- unstable or slippery surfaces
- overhead obstructions and high voltage conductors
- hazardous locations
- inadequate surface support to withstand all load forces imposed by the machine
- wind and weather conditions
- the presence of unauthorized personnel
- other possible unsafe conditions

Operating Instructions

Do Not Operate Unless:

☑ You learn and practice the principles of safe machine operation contained in this operator's manual.

1 Avoid hazardous situations.

2 Always perform a pre-operation inspection.

3 Always perform function tests prior to use.

4 Inspect the workplace.

5 Only use the machine as it was intended.

Fundamentals

The Operating Instructions section provides instructions for each aspect of machine operation. It is the operator's responsibility to follow all the safety rules and instructions in the operator's, safety and responsibilities manuals.

Using the machine for anything other than lifting personnel, along with their tools and materials, to an aerial work site is unsafe and dangerous.

Only trained and authorized personnel should be permitted to operate a machine. If more than one operator is expected to use a machine at different times in the same work shift, they must all be qualified operators and are all expected to follow all safety rules and instructions in the operator's, safety and responsibilities manuals. That means every new operator should perform a pre-operation inspection, function tests, and a workplace inspection before using the machine.

Starting the Engine

1 At the ground controls, turn the key switch to the desired position.

2 Be sure both ground and platform control red Emergency Stop buttons are pulled out to the on position.

Gasoline/LPG models

3 Choose fuel by pressing the fuel select button.

4 Press the engine start button. If the engine fails to start or dies, the restart delay will disable the start switch for 3 seconds.

Diesel models

3 Press the glow plug button.

4 Press the engine start button. If the engine fails to start or dies, the restart delay will disable the start switch for 3 seconds.

All models

If the engine fails to start after 15 seconds of cranking, determine the cause and repair any malfunction. Wait 60 seconds before trying to start again.

In cold conditions, 20°F / -6°C and below, warm the engine for 5 minutes before operating to prevent hydraulic system damage.

In extreme cold conditions, 0°F / -18°C and below, machines should be equipped with optional cold start kits. Attempting to start the engine when temperatures are below 0°F / -18°C may require the use of a booster battery.

Gasoline/LPG models: In cold conditions, 20°F / -6°C and below, the machine should be started on gasoline and warmed for 2 minutes, then switched to LPG. Warm engines can be started on LPG.

Emergency Stop

Push in either the ground or platform red Emergency Stop button to the off position to stop all functions and turn the engine off.

Repair any function that operates when the red Emergency Stop button is pushed in to the off position.

Selecting and operating the ground controls will override the platform red Emergency Stop button.

Auxiliary Controls

Use auxiliary power if the primary power source (engine) fails.

1 Turn the key switch to ground or platform control.

2 Pull out the red Emergency Stop button to the on position.

3 Press down the foot switch when operating the auxiliary controls from the platform.

4 Simultaneously hold the auxiliary power button and activate the desired function.

Machines equipped with the auxiliary power drive option: The drive function will operate.

Operation from Ground

1 Turn the key switch to ground control.

2 Pull out the red Emergency Stop button to the on position.

3 Gasoline/LPG models: Choose fuel by pressing the fuel select button.

4 Start the engine.

To Position Platform

1 Push and hold a function enable/ speed select button.

2 Push the appropriate function button according to the markings on the control panel.

Drive and steer functions are not available from the ground controls.

Operation from Platform

1 Turn the key switch to platform control.

2 Pull out both ground and platform red Emergency Stop buttons to the on position.

3 Gasoline/LPG models: Choose fuel by pressing the fuel select button.

4 Start the engine. Do not press down the foot switch when starting the engine.

To Position Platform

1 Press down the foot switch.

2 Slowly move the appropriate function control handle or toggle switch or press the appropriate button according to the markings on the control panel.

To Steer

1 Press down the foot switch.

Models with 4 wheel steer:

2 Select the steer mode by pressing a steer mode button. The indicator light next to the current steer mode will be on.

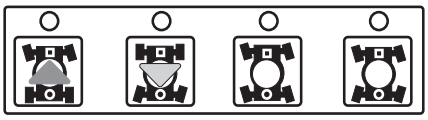

All models:

3 Slowly move the drive/steer control handle in the direction indicated by the blue or yellow triangles OR press the thumb rocker switch located on top of the drive control handle.

Use the color-coded direction arrows on the platform controls and the drive chassis to identify the direction the wheels will turn.

To Drive

1 Press down the foot switch.

2 Increase speed: Slowly move the drive/steer control handle in the direction indicated by the blue or yellow arrows.

Decrease speed: Slowly move the drive/steer control handle toward center.

Stop: Return the drive/steer control handle to center or release the foot switch.

Use the color-coded direction arrows on the platform controls and the drive chassis to identify the direction the machine will travel.

Machine travel speed is restricted when the boom is raised or extended.

Driving on a slope

Determine the uphill, downhill and side slope ratings for the machine and determine the slope grade.

Maximum slope rating, counterweight uphill (gradeability):
2WD: 30% (17°)
4WD: 45% (24°)

Maximum slope rating, counterweight downhill:
2WD: 15% (9°)
4WD: 35% (19°)

Maximum side slope rating:
25% (14°)

Note: Slope rating is subject to ground conditions and adequate traction. The term gradeability applies to the counterweight uphill configuration only.

Be sure the boom is below horizontal and the platform is between the circle-end (yellow arrow) wheels.

Push the drive speed select button until the light next to the machine on incline symbol is on.

To determine the slope grade:

Measure the slope with a digital inclinometer OR use the following procedure.

You will need:

carpenter's level

straight piece of wood, at least 3 feet / 1 m long

tape measure

Lay the piece of wood on the slope.

At the downhill end, lay the level on the top edge of the piece of wood and lift the end until the piece of wood is level.

While holding the piece of wood level, measure the vertical distance from the bottom of the piece of wood to the ground.

Divide the tape measure distance (rise) by the length of the piece of wood (run) and multiply by 100.

Example:

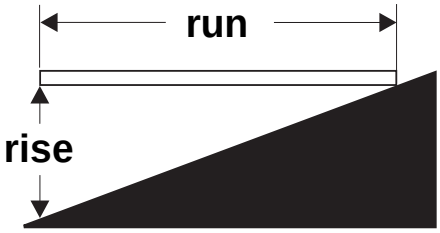

Piece of wood = 144 inches (3.6 m)

Run = 144 inches (3.6 m)

Rise = 12 inches (0.3 m)

12 in ÷ 144 in = 0.083 x 100 = 8.3% grade

0.3 m ÷ 3.6 m = 0.083 x 100 = 8.3 % grade

If the slope exceeds the maximum uphill, downhill or side slope rating, then the machine must be winched or transported up or down the slope. See Transport and Lifting Instructions section.

duma rent www.duma-rent.com

OPERATING INSTRUCTIONS

Drive Enable

Light on indicates that the boom has moved past either circle-end wheel and the drive function is turned off.

To drive, push the drive enable button and slowly move the drive/steer control handle off center.

If the drive/steer control handle is not moved within two seconds of pushing the drive enable button, the drive function will not operate. Release and push the drive enable button again.

Be aware that the machine may move in the opposite direction that the drive and steer controls are moved.

Always use the color-coded direction arrows on the platform controls and the drive chassis to identify the direction the machine will travel.

Generator (if equipped)

To operate the generator, press the generator button. The indicator light will come on and the engine will continue to run.

Plug power tools into the power to platform GFCI outlet.

To turn off the generator, push the generator button. The indicator light will turn off.

Engine Idle Select (rpm)

Select the engine idle (rpm) by pressing the select button. The indicator light next to the current setting will be on.

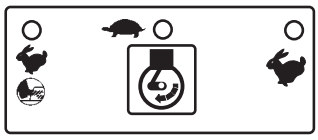

- Rabbit and foot switch symbol: foot switch activated high idle
- Turtle symbol: low idle
- Rabbit symbol: high idle

Check Engine Light

Light on and engine stopped: Tag the machine and remove from service.

Light on and engine still running: Contact service personnel within 24 hours.

Operating Envelope Indicator Lights

The operating envelope indicator lights will come on to notify the operator that a function has been interrupted and/or an action is required by the operator.

Lower Primary Boom indicator light flashing: Lower the primary boom until the indicator light is off.

Machine Not Level indicator light flashing: The tilt alarm will be sounding when this light is flashing. Move the machine to a firm level surface.

Platform Not Level indicator light flashing: The tilt alarm will be sounding when this light is flashing. The Platform Level toggle switch will only work in the direction that will level the platform. Level the platform until the indicator light is off.

Platform Overload Indicator Light (if equipped)

Light flashing indicates the platform is overloaded and no functions will operate.

Remove weight from the platform until the light goes off.

Stopping the Engine

Push in the red Emergency Stop button and turn the key switch to the off position.

Fall Protection

Personal fall protection equipment (PFPE) is required when operating this machine.

All PFPE must comply with applicable governmental regulations, and must be inspected and used in accordance with the PFPE manufacturer's instructions.

After Each Use

1 Select a safe parking location—firm level surface, clear of obstruction and traffic.

2 Retract and lower the boom to the stowed position.

3 Rotate the turntable so that the boom is between the circle-end wheels.

4 Turn the key switch to the off position and remove the key to secure from unauthorized use.

5 Chock the wheels.

duma rent www.duma-rent.com

Decals

Inspection for Decals with Words

Determine whether the decals on your machine have words or symbols. Use the appropriate inspection to verify that all decals are legible and in place.

Part No.	Description	Quantity
25994	Caution - Component Damage Hazard	1
27204	Arrow - Blue	1
27205	Arrow - Yellow	1
27206	Triangle - Blue	2
27207	Triangle - Yellow	2
27564	Danger - Electrocution Hazard	2
28158	Label - Unleaded	1
28159	Label - Diesel	1
28160	Label - LPG (option)	1
28161	Warning - Crushing Hazard	3
28164	Notice - Hazardous Materials	1
28165	Notice - Foot switch	1
28171	Label - No Smoking	1
28174	Label - Power to Platform, 230V	2
28175	Caution - Compartment Access	1
28176	Notice - Missing Manuals	1
28177	Warning - Collision Hazard	2
28181	Warning - No Step or Ride	1
28235	Label - Power to Platform, 115V	2
28236	Warning - Failure To Read . . .	1
30080	Notice - Max. Capacity, 500 lbs / 227 kg	1
31060	Danger - Tip-over Hazard	4
33952	Danger - Tip-over Hazard	1
40434	Label - Lanyard Anchorage	3
43595	Danger - Tip-over Hazard, Foam FilledTires	4
44986	Notice - Max. Manual Force, 90 lbs / 400 N, CE and Australia	11
44981	Label - Air Line to Platform (option)	2

Part No.	Description	Quantity
52966	Cosmetic - 4 x 2	1
52967	Cosmetic - 4 x 4	1
65278	Caution - No Step	4
72168	Notice - Starter Battery	1
72169	Notice - Controls Battery	1
82268	Cosmetic - Genie Z-80/60	1
82269	Ground Control Panel	1
82281	Platform Control Panel	1
82296	Danger/Notice - Tire Specifications, Foam Filled	4
82312	Cosmetic - Z-80	1
82366	Label - Chevron Rykon	1
82989	Danger/Notice - Tire Specifications, High Flotation	4
97571	Notice - Ford Engine Specs	1
97576	Notice - Deutz Engine Specs	1
97592	Label - Fuse and Relay Panel Layout	1
97602	Warning - Explosion Hazard	1
97758	Notice - Perkins Engine Specs	1
97815	Label - Lower Mid-rail	1
97875	Label - Weld Line to Platform (option)	2
97887	Notice - Max Side Force, 150 lbs / 667 N, ANSI and CSA	1
97890	Danger - General Safety	2
114166	Label - Transport diagram	2
114245	Notice - Continental Engine Specs	1
133400	Label - Wheel Load	4
1000238	Notice - Operating Instructions	2

Shading indicates decal is hidden from view, i.e. under covers

duma rent www.duma-rent.com

DECALS

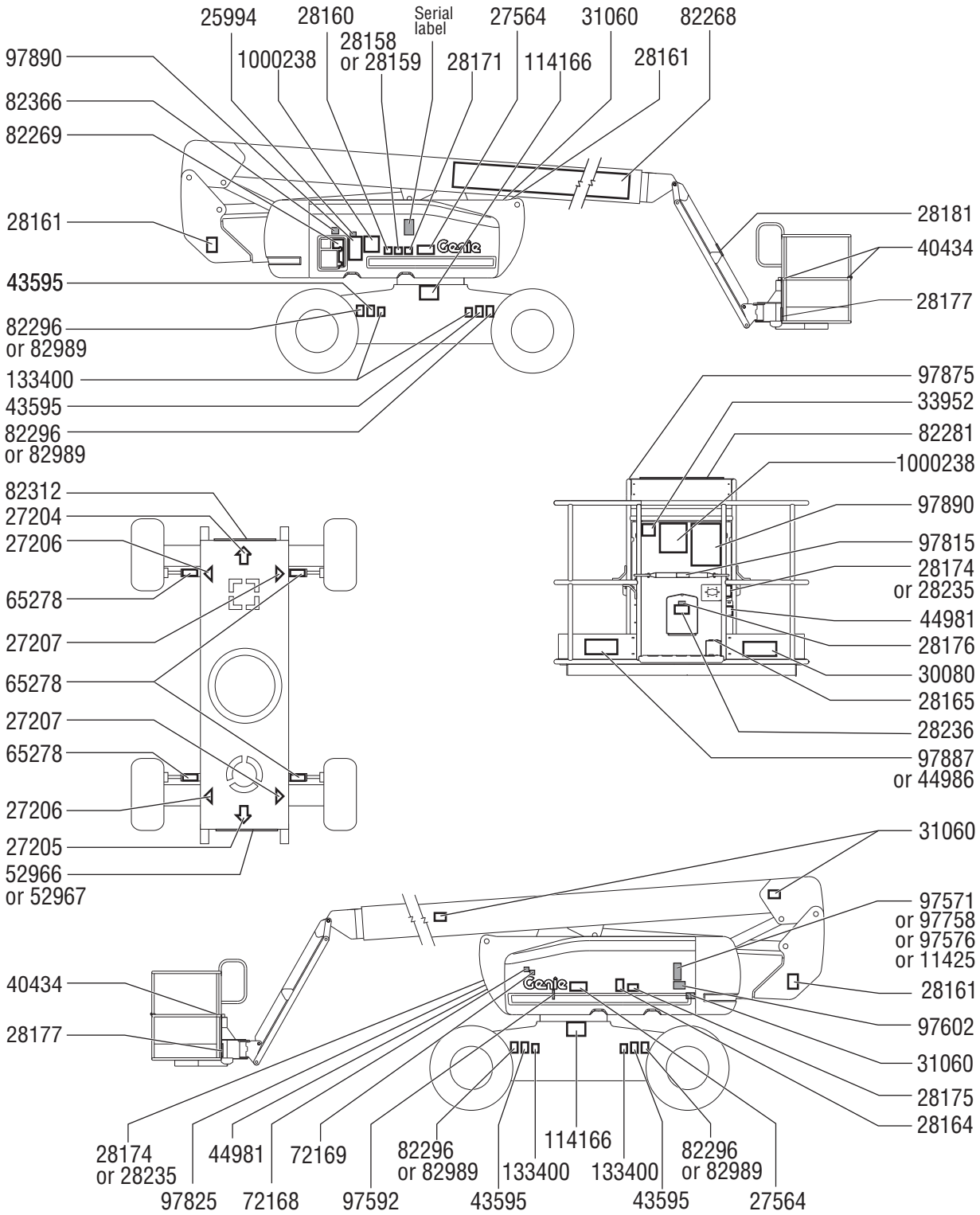

Inspection for Decals with Symbols

Determine whether the decals on your machine have words or symbols. Use the appropriate inspection to verify that all decals are legible and in place.

Part No.	Description	Quantity
27204	Arrow - Blue	1
27205	Arrow - Yellow	1
27206	Triangle - Blue	2
27207	Triangle - Yellow	2
28158	Label - Unleaded	1
28159	Label - Diesel	1
28160	Label - LPG (option)	1
28171	Label - No Smoking	1
28174	Label - Power to Platform, 230V	2
28235	Label - Power to Platform, 115V	2
40434	Label - Lanyard Anchorage	3
44981	Label - Air Line to Platform (option)	2
52966	Cosmetic - 4 x 2	1
52967	Cosmetic - 4 x 4	1
82268	Cosmetic - Genie Z-80/60	1
82269	Ground Control Panel	1
82281	Platform Control Panel	1
82312	Cosmetic - Z-80	1

Part No.	Description	Quantity
82472	Warning - Crushing Hazard	3
82473	Caution - Compartment Access	1
82487	Label - Read the Manual	2
82544	Danger - Electrocution Hazard	2
82545	Notice - Max. Capacity, 500 lbs / 227 kg	1
82548	Warning - Platform Rotate	2
82577	Label - Platform Overload Patch	1
82602	Danger - Max Manual Force, 667 N, ANSI	1
82603	Label - Drive Enable Patch	1
82604	Danger- Max. Manual Force, 400 N	1
82607	Caution - No Step	4
82671	Label - Weld Line to Platform (option)	2
82924	Caution - Component Damage Hazard	1
82990	Label - Tire Pressure, High Flotation	4
97815	Label - Lower Mid-rail	1
114166	Label - Transport Diagram	2
133400	Label - Wheel Load	4

duma rent www.duma-rent.com

DECALS

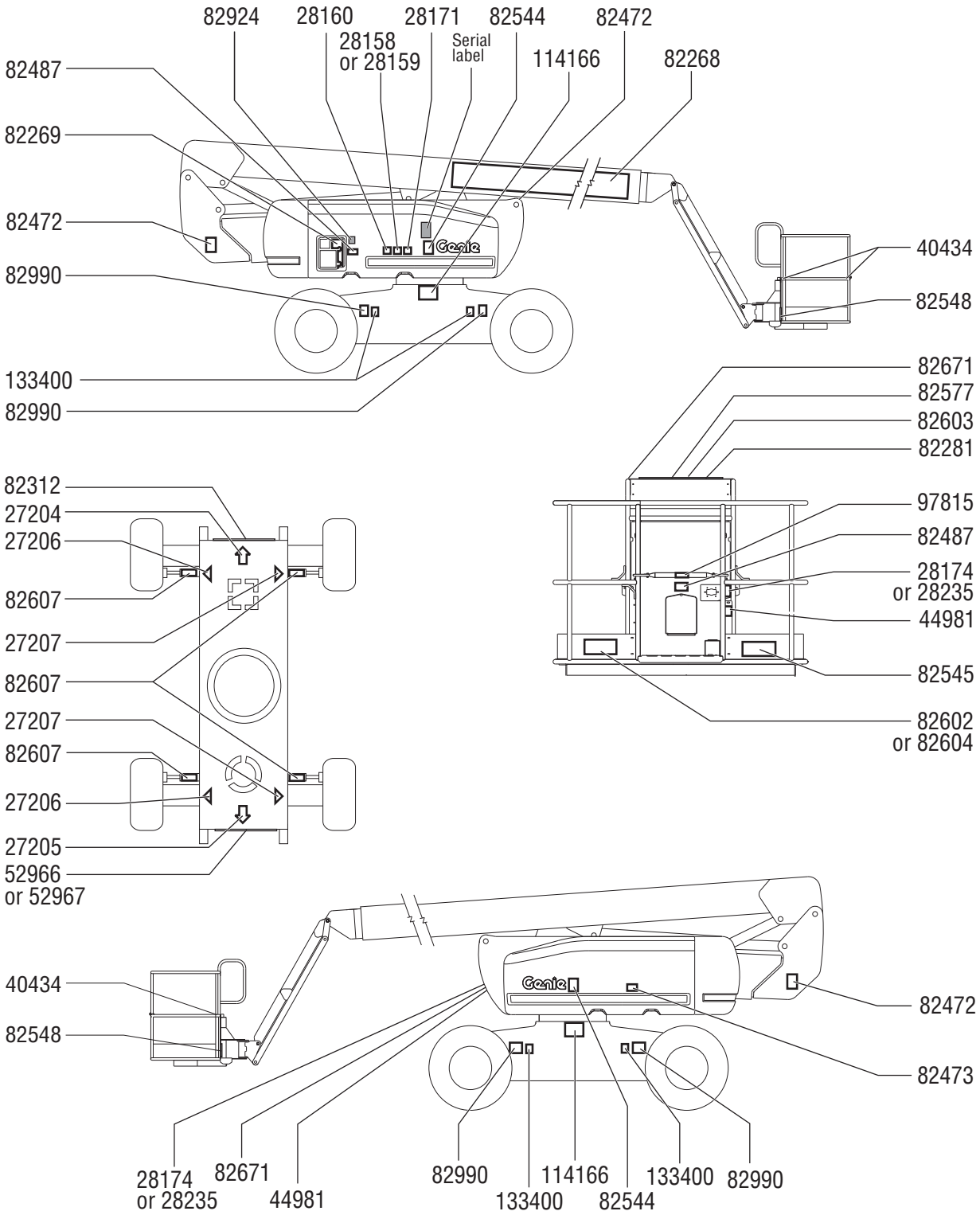

duma rent www.duma-rent.com

Transport and Lifting Instructions

Observe and Obey:

- ☑ Genie Industries provides this securement information as a recommendation. Drivers are solely responsible for making sure machines are properly secured and the correct trailer is selected pursuant to US Department of Transportation regulations, other localized regulations, and their company policy.
- ☑ Genie customers needing to containerize any lift or Genie product should source a qualified freight forwarder with expertise in preparing, loading and securing construction and lifting equipment for international shipment.
- ☑ Only qualified aerial lift operators should move the machine on or off the truck.
- ☑ The transport vehicle must be parked on a level surface.
- ☑ The transport vehicle must be secured to prevent rolling while the machine is being loaded.
- ☑ Be sure the vehicle capacity, loading surfaces and chains or straps are sufficient to withstand the machine weight. Genie lifts are very heavy relative to their size. See the serial label for the machine weight. See the Decals section for the serial label location.
- ☑ Be sure the turntable is secured with the turntable rotation lock before transporting. Be sure to unlock the turntable for operation.
- ☑ Do not drive the machine on a slope that exceeds the slope or side slope rating. See Driving on a Slope in the Operating Instructions section.
- ☑ If the slope of the transport vehicle bed exceeds the uphill or downhill maximum slope rating, the machine must be loaded and unloaded using a winch as described. See the Specifications section for the slope ratings.

Free-wheel Configuration for Winching

Chock the wheels to prevent the machine from rolling.

2WD models: Release the non-steer wheel brakes by turning over the drive hub disconnect caps.

4WD models: Release the wheel brakes by turning over all four drive hub disconnect caps.

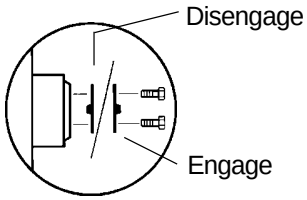

Be sure the winch line is properly secured to the drive chassis tie points and the path is clear of all obstructions.

Reverse the procedures described to re-engage the brakes.

Note: The pump free-wheel valve should always remain closed.

duma rent www.duma-rent.com

Securing to Truck or Trailer for Transit

Always use the turntable rotation lock pin each time the machine is transported.

Turn the key switch to the off position and remove the key before transporting.

Inspect the entire machine for loose or unsecured items.

Securing the Chassis

Use chains of ample load capacity.

Use a minimum of 5 chains.

Adjust the rigging to prevent damage to the chains.

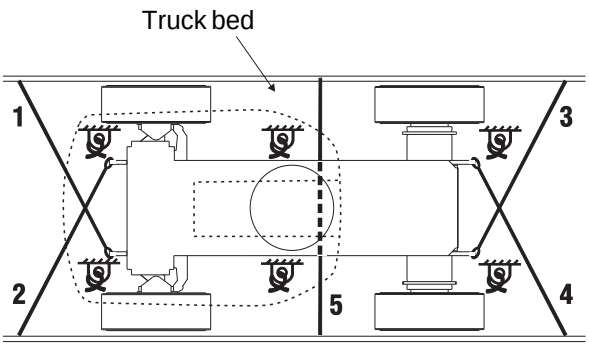

Securing the Platform

Make sure the jib and platform are in the stowed position.

Place a wooden block under the platform rotator. Do not allow the block to contact the platform cylinder.

Secure the platform with a nylon strap placed through the lower platform support. Do not use excessive downward force when securing the boom section.

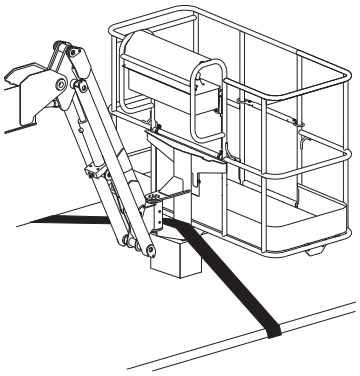

duma rent www.duma-rent.com

TRANSPORT AND LIFTING INSTRUCTIONS

Observe and Obey:

- ☑ Only qualified riggers should rig and lift the machine.
- ☑ Be sure the crane capacity, loading surfaces and straps or lines are sufficient to withstand the machine weight. See the serial label for the machine weight.

Lifting Instructions

Fully lower and retract both the primary and secondary booms. Remove all loose items on the machine.

Rotate the turntable 90 degrees.

Determine the center of gravity of your machine using the measurements on the pictures on this page.

Attach the rigging only to the designated lifting points on the machine.

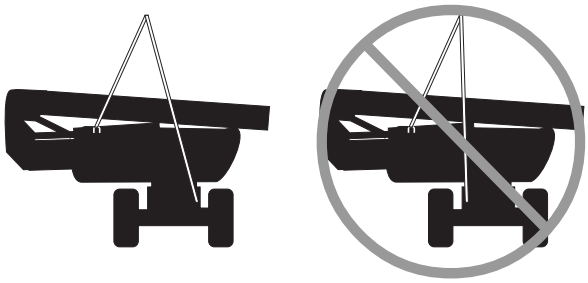

Attach the rigging to the 2 chassis lifting points farthest from the turntable lifting point.

Adjust the rigging to prevent damage to the machine and to keep the machine level.

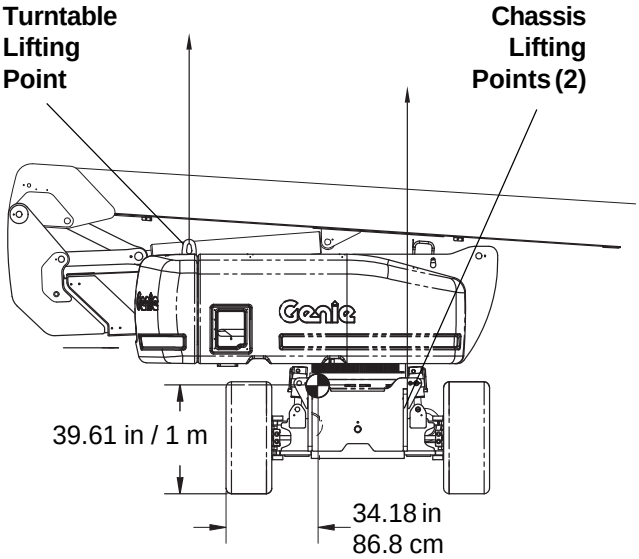

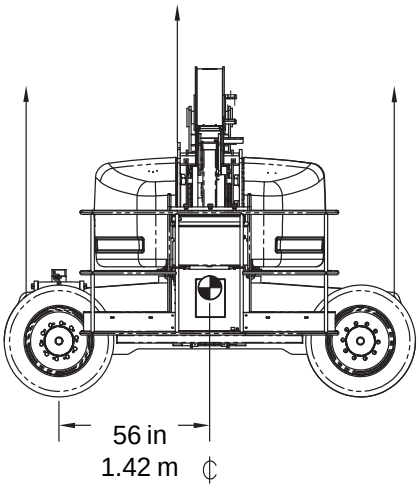

duma rent www.duma-rent.com

Specifications

Z-80/60		
Height, working maximum	86 ft	26.2 m
Height, platform maximum	80 ft	24.4 m
Height, stowed maximum	9 ft 10 in	3 m
Horizontal reach, maximum	60 ft	18.3 m
Width	8 ft 2 in	2.5 m
Length, stowed	37 ft	11.3 m
Length, stowed for transport	30 ft	9.1 m
Maximum load capacity	500 lb	227 kg
Maximum wind speed	25 mph	12.5 m/s
Wheelbase	9 ft	2.7 m
Ground clearance	12 in	30 cm
Turning radius, outside		
2 wheel steer	24 ft 6 in	7.5 m
4 wheel steer	15 ft	4.6 m
Turning radius, inside		
2 wheel steer	14 ft 6 in	4.4 m
4 wheel steer	7 ft	2.1 m
Turntable rotation (degrees)	360° continuous	
Turntable tailswing, secondary boom lowered	7 ft 4 in	2.24 m
Turntable tailswing, secondary boom raised	3 ft 10 in	1.17 m
Controls	12V DC proportional	
Platform dimensions, 6 foot (length x width)	72 in x 30 in	1.8 m x 76 cm
Platform dimensions, 8 foot (length x width)	96 in x 36 in	2.4 m x 91 cm
Platform leveling	self-leveling	
Platform rotation	160°	
AC outlet in platform	standard	

Hydraulic pressure, maximum	3200 psi	220 bar
System voltage	12V	
Tire size	18-625, 16 ply FF	
Tire size - high flotation tires	445D50/710 18PR	
Airborne noise emissions Maximum sound level at normal operating workstations (A-weighted)	113 dB	
Weight (Machine weights vary with option configurations)	See Serial Label	
Fuel tank capacity	35 gallons	132 liters
Drive speeds (foam filled tires)		
Stowed	3 mph 40 ft/9.1 sec	4.8 km/h 12.2 m/9.1 sec
Raised or extended	0.7 mph 40 ft/40 sec	1.1 km/h 12.2 m/40 sec
Drive speeds (high flotation tires)		
Stowed	2.0 mph 40 ft/13.6 sec	3.2 km/h 12.2 m/9.1 sec
Raised or extended	0.44 mph 40 ft/62 sec	0.64 km/h 12.2 m/62 sec
Maximum slope rating, stowed position, 2WD		
Counterweight uphill	30% (17°)	
Counterweight downhill	15% (9°)	
Side slope	25% (14°)	
Maximum slope rating, stowed position, 4WD		
Counterweight uphill	45% (24°)	
Counterweight downhill	35% (19°)	
Side slope	25% (14°)	

Note: Slope rating is subject to ground conditions and adequate traction.

Continuous improvement of our products is a Genie policy. Product specifications are subject to change without notice or obligation.

duma rent www.duma-rent.com

SPECIFICATIONS

Floor loading information		
Tire load, maximum	22,500 lbs	10,206 kg
Tire contact pressure	130 psi	9.1 kg/cm^2 896 kPa
Occupied pressure	377 psf	1841 kg/m^2 18.05 kPa

Note: Floor loading information is approximate and does not incorporate different option configurations. It should be used only with adequate safety factors.

Z-80/60 Range of Motion

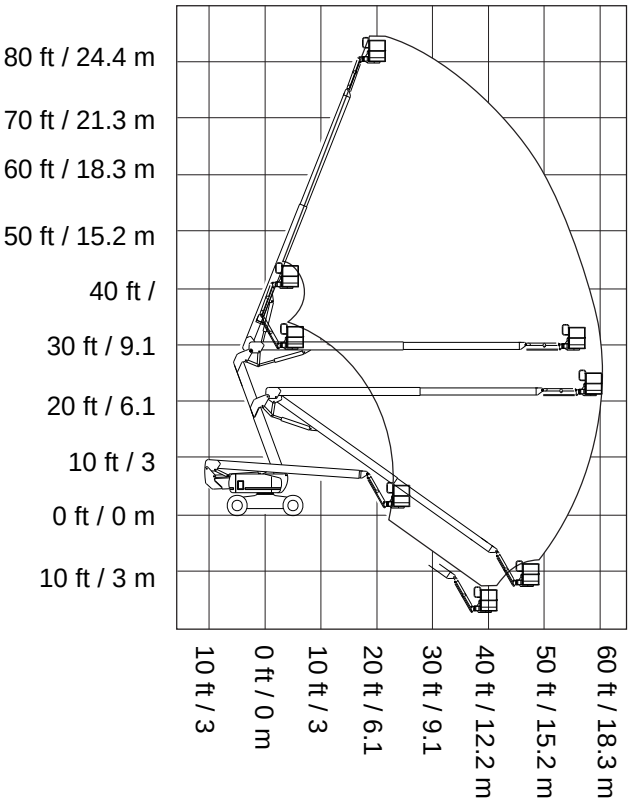

Continuous improvement of our products is a Genie policy. Product specifications are subject to change without notice or obligation.

California Proposition 65

Warning

The exhaust from this product contains chemicals known to the State of California to cause cancer, birth defects or other reproductive harm.

Distributed By:

Genie North America
Phone 425.881.1800
Toll Free USA and Canada 800.536.1800
Fax 425.883.3475

Genie Australia Pty Ltd.
Phone +61 7 3375 1660
Fax +61 7 3375 1002

Genie China
Phone +86 21 53852570
Fax +86 21 53852569

Genie Malaysia
Phone +65 98 480 775
Fax +65 67 533 544

Genie Japan
Phone +81 3 3453 6082
Fax +81 3 3453 6083

Genie Korea
Phone +82 25 587 267
Fax +82 25 583 910

Genie Brasil
Phone +55 11 41 665 755
Fax +55 11 41 665 754

Genie Holland
Phone +31 183 581 102
Fax +31 183 581 566

Genie Scandinavia
Phone +46 31 575100
Fax +46 31 579020

Genie France
Phone +33 (0)2 37 26 09 99
Fax +33 (0)2 37 26 09 98

Genie Iberica
Phone +34 93 579 5042
Fax +34 93 579 5059

Genie Germany
Phone 0800 180 9017
Phone +49 422 149 1818
Fax +49 422 149 1820

Genie U.K.
Phone +44 (0)1476 584333
Fax +44 (0)1476 584334

Genie Mexico City
Phone +52 55 5666 5242
Fax +52 55 5666 3241